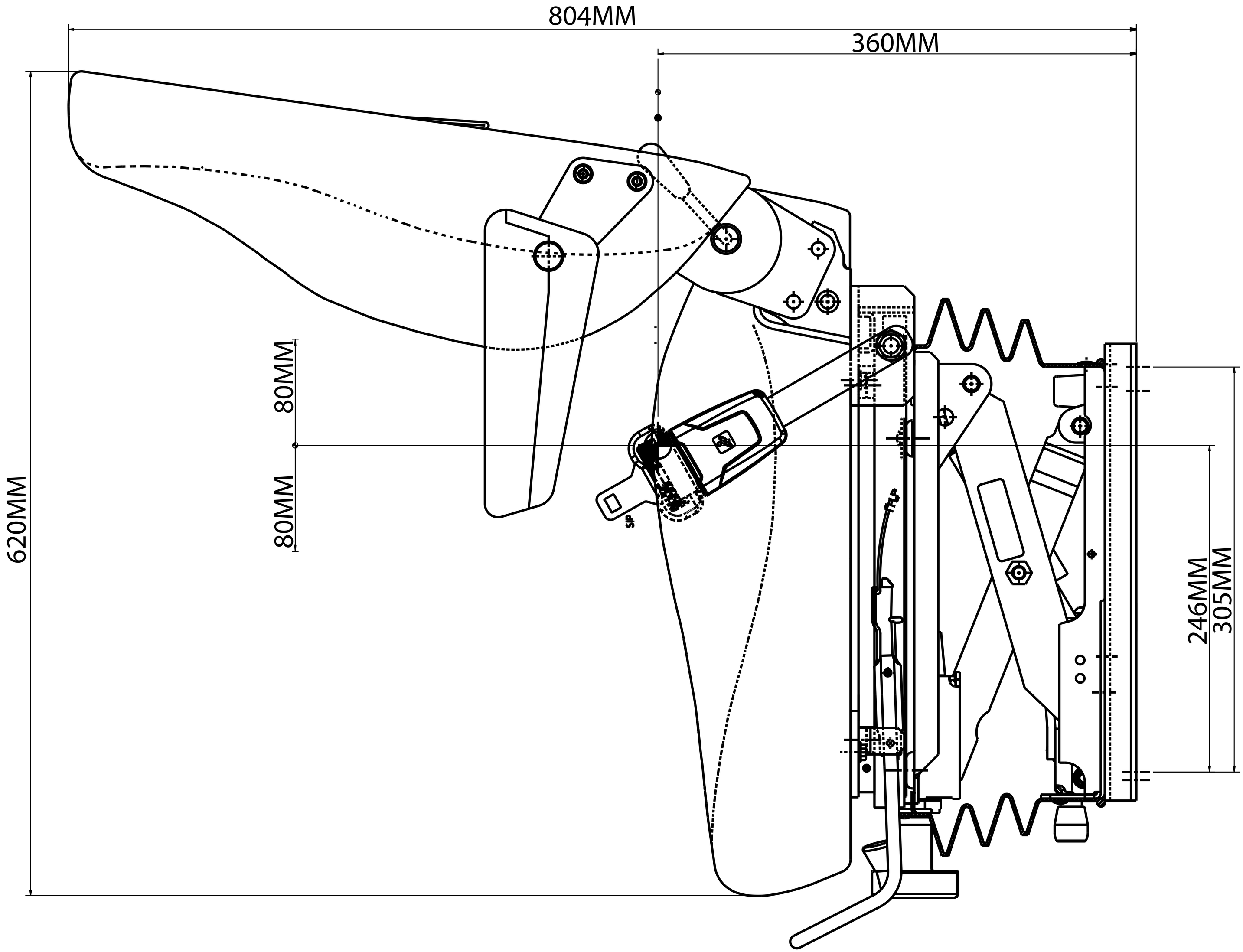
804MM
360MM
620MM
80MM
80MM
246MM
305MM