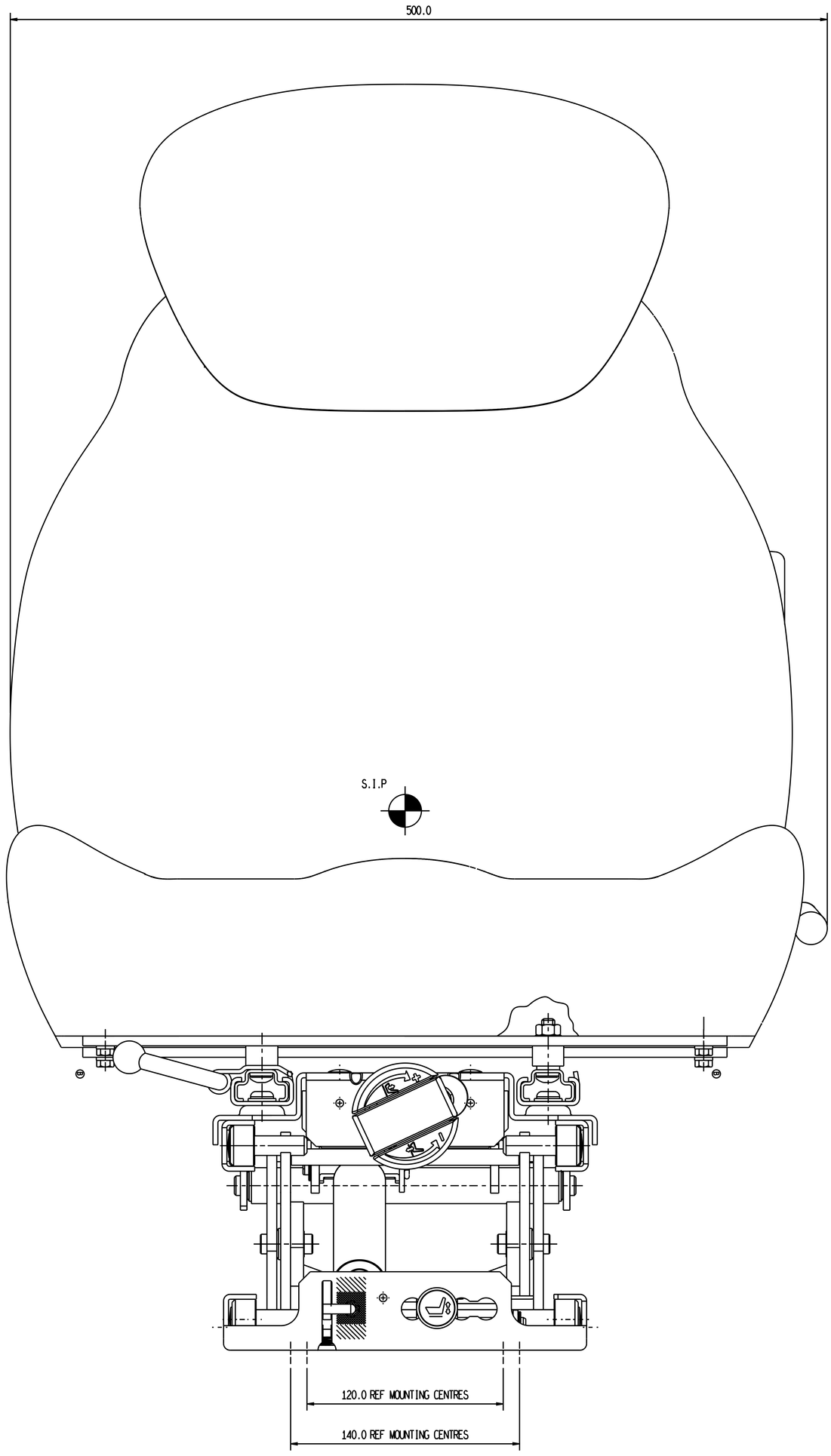
500.0
S.I.P
120.0 REF MOUNTING CENTRES
140.0 REF MOUNTING CENTRES